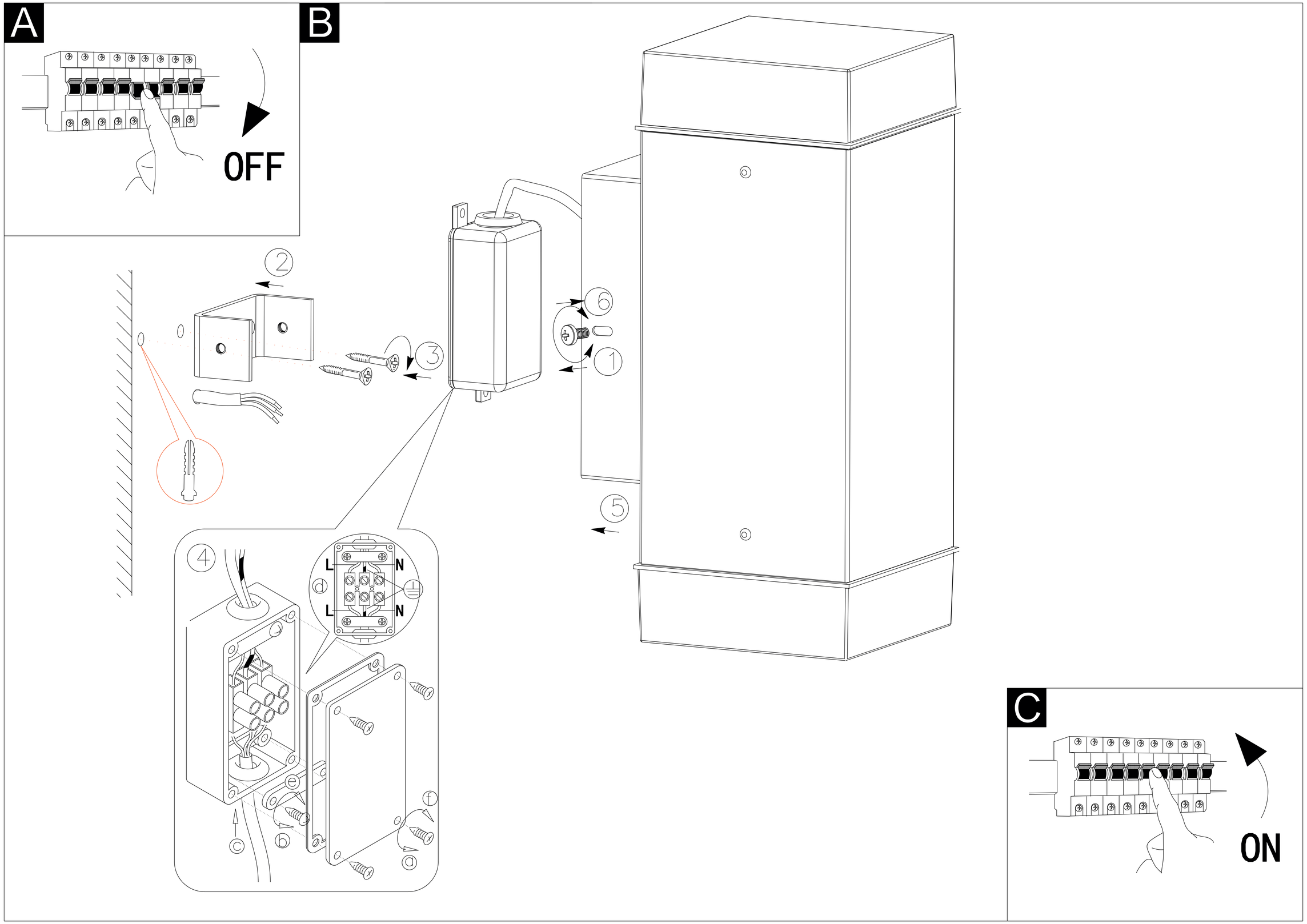
A
OFF
B
1
2
3
4
5
6
L
N
L
N
a
b
c
d
e
f
C
ON